Is a TechToy

www.TechToys.com.hk

TechToys Company

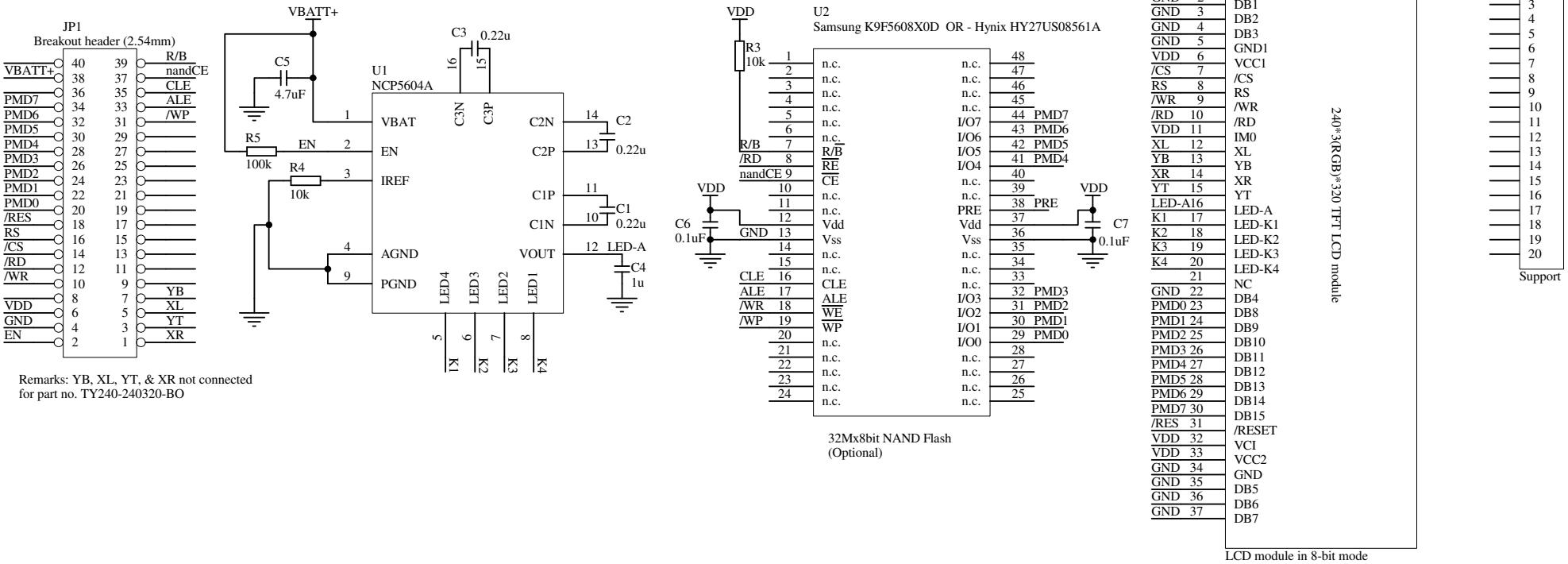

Remarks: YB, XL, YT, & XR not connected
for part no. TY240-240320-BO

Rev 1B:
1. Change TI's TPS60230RGTT to Onsemi's NCP5604A
2. Use battery input for NCP5604A for development of hand-held devices

Title: TY240-240320-BO 2.4" TFT LCD module on break out board With optional 32MB NAND Flash	
Revision : Rev 1B	Size : A4
Date: 26 Nov 2007	Drawn by : TechToys Company